CAD FILE:

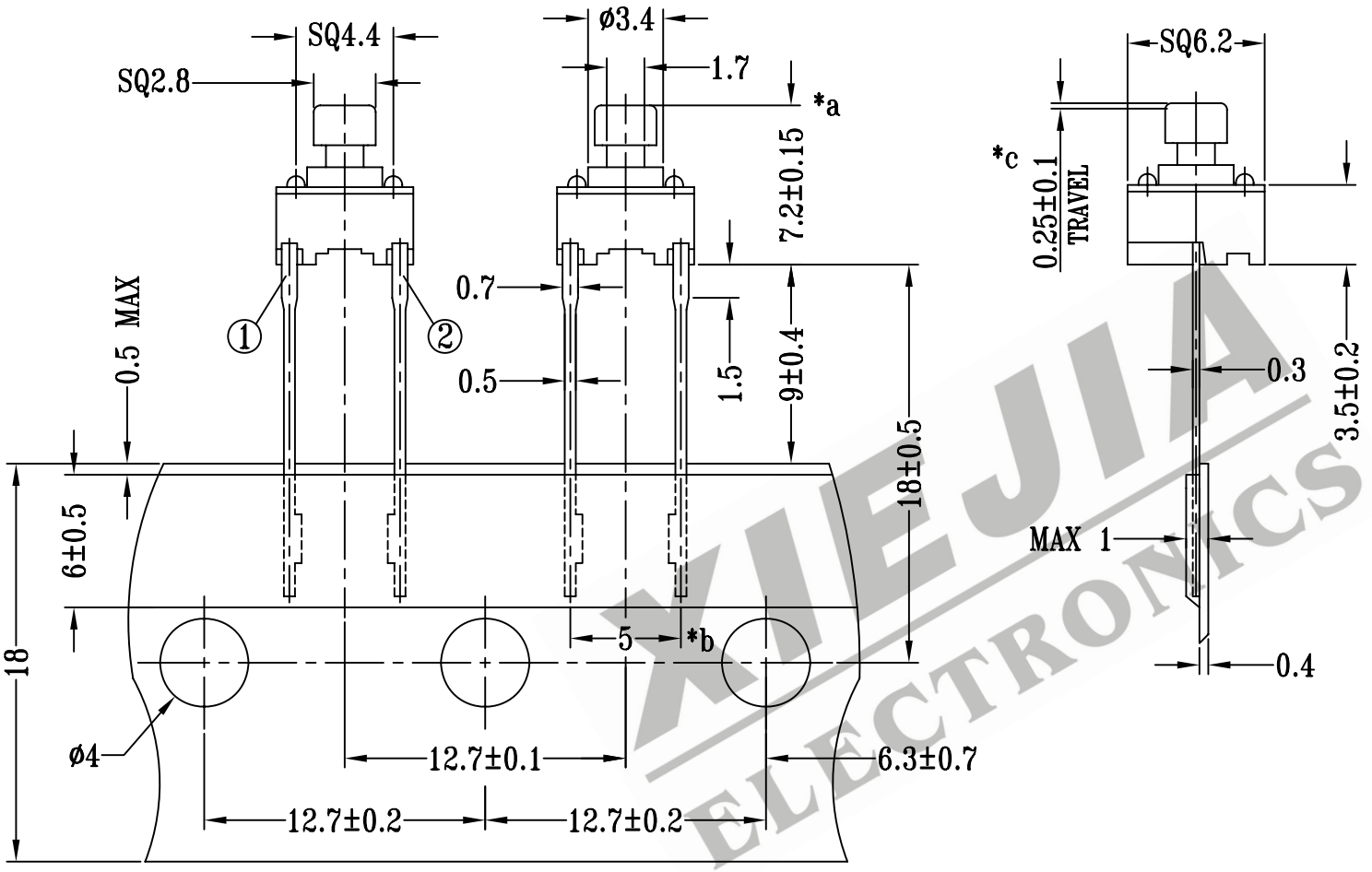

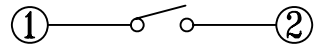

SCHEMATIC

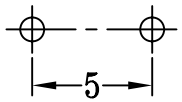

P.C.B LAYOUT

OPERATING FORCE	CODE
100gf	T
130gf	V
160gf	X
170gf	W
190gf	Y
250gf	Z

注:带"*"表示关键尺寸(3个)

NO.	PART NAME	MATERIAL	Q'TY	FINISHING
8				
7				
6	ADHESIVE TAPE	6.0x0.15mm ADHESIVE TAPE	1	NATURAL
5	PAPER TAPE	18.0x0.4mm PAPER	1	NATURAL
4	CASE	NYLON	1	BLACK
3	CONTACT	PBS	1	Ag CLAD
2	COVER	ZINC PLATE	1	WASHING
1	KNOB	POM	1	BLACK

TOLERANCE UNLESS SPECIFIED
WITHIN: 1.5±0.1mm
OVER : 1.5±0.2mm

SHENZHEN XIEJIA ELECTRONICS CO.,LTD.

ISSUE	DATE	DESCRIPTIONS	APPD.

TITLE : TACT SWITCH
UNIT : MM
DRWG NO.: XJ-DR-TC0328-00
MODEL: TC-0328
SCALE: 3 : 1

DWN.	ZHOUYU	2003-10-15
CHK'D	FANGYING	2003-10-15
APPD.	KANGXINAN	2003-10-15

ALL MATERIALS MUST BE COMPLIANT TO ROHS

XIEJIA ELECTRONICS